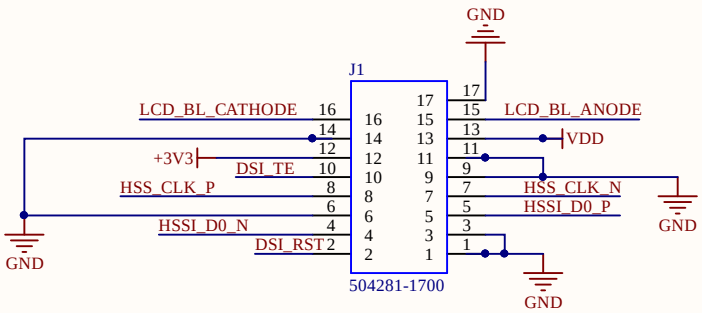

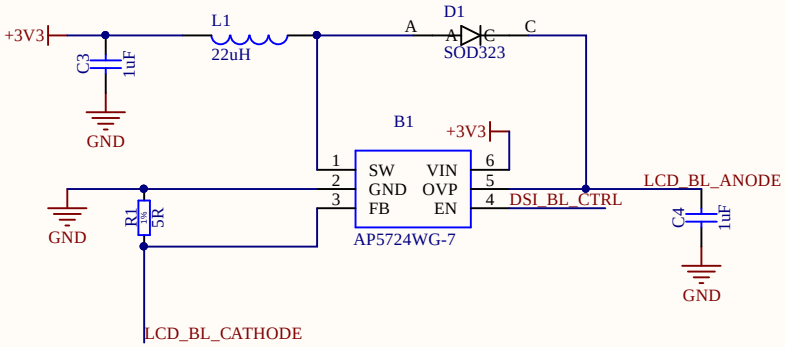

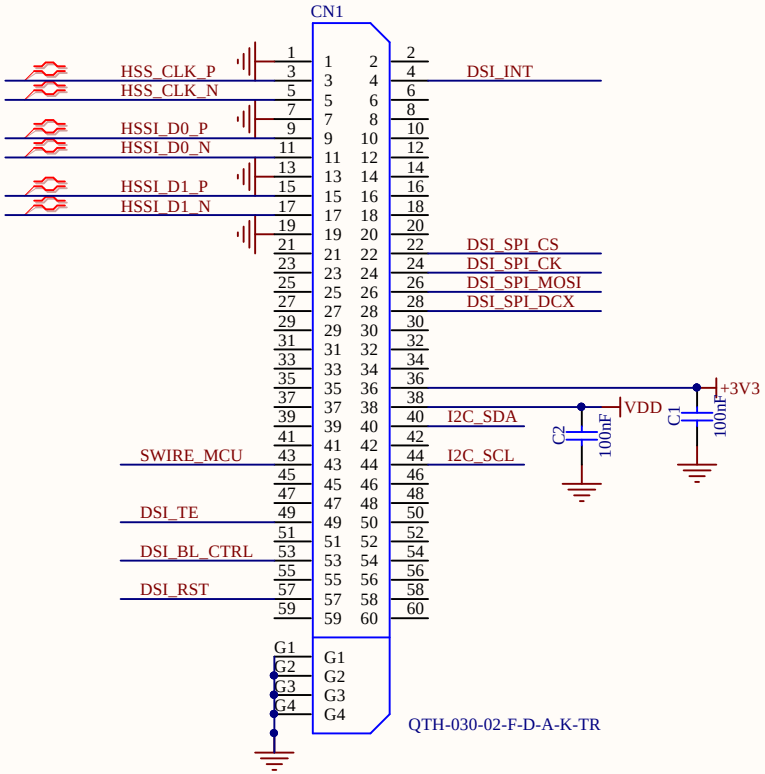

Title: **3.4" Panasys 320x320 MIPI, 17way FPC**		
Project: **STM32L4Rx-EVAL Daughter board**		
Size: A4	Reference: Carl 001	Revision: A.1
Date: 19/05/2018		Sheet: 1 of 1

life.augmented

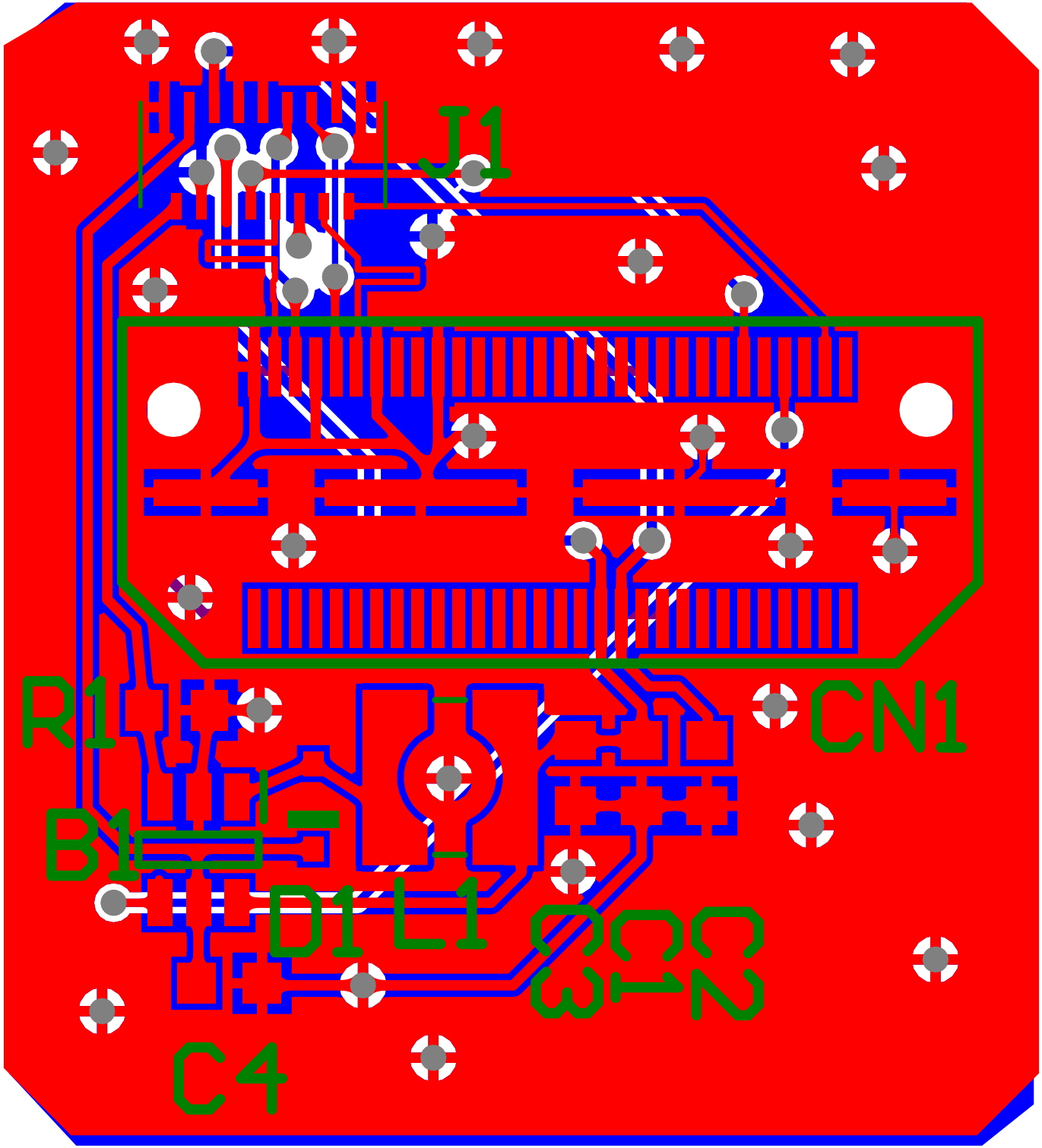
J1
R1
CN1
B1
D1
L1
C4